KANTHAL®

# TUBOTHAL®
## HIGH-PERFORMANCE CARTRIDGE HEATING ELEMENTS

# TABLE OF CONTENTS


## INTRODUCTION TO TUBOTHAL® ..... 4

TUBOTHAL® CARTRIDGE HEATING ELEMENTS ..... 5

KEY FEATURES ..... 6

KEY ADVANTAGES ..... 7

QUICK PRODUCT SPECIFICATION SHEET ..... 8

ELECTRIFICATION WITH TUBOTHAL® ..... 9

## TECHNICAL DATA ..... 10

FUNCTIONAL ZONES AND GEOMETRY DEFINITIONS ..... 11

STANDARD ELEMENT DIAMETERS AND ZONE MEASUREMENTS ..... 12

ELEMENT MATERIALS ..... 13

POWER LIMIT AND VOLTAGE RANGE ..... 14

SURFACE LOADING AND TEMPERATURE LIMITS ..... 15

FURNACE ATMOSPHERE CONSIDERATIONS ..... 16

COLD ZONE INSULATION ..... 17

RADIANT TUBES ..... 18

## STANDARD DESIGN GUIDELINES ..... 20

DESIGN PARAMETERS AND CONSIDERATIONS ..... 21

HORIZONTAL DESIGN ..... 24

VERTICAL DESIGN ..... 29

## SPECIAL DESIGN ..... 30

VERTICAL STANDING ELEMENT INSIDE A HANGING TUBE ..... 32

VERTICAL STANDING ELEMENT INSIDE A STANDING TUBE ..... 33

OTHER SPECIAL DESIGNS ..... 34

## TUBOTHAL® ACCESSORIES ..... 35

RADIANT TUBES ..... 36

TUBE HANGERS ..... 37

ELECTRICAL CONNECTORS ..... 38

THERMOCOUPLES ..... 39

## OPERATION GUIDELINES ..... 40

INSTALLATION – ASSEMBLY ..... 41

DURING FURNACE OPERATION ..... 42

SHUTTING DOWN OR POWERING DOWN ..... 43

TUBE ROTATION ..... 44

DIAGNOSTICS ..... 45

## RISK CONSIDERATIONS ..... 46

CREEP CURRENT/ LEAKAGE CURRENT ..... 47

TERMINAL BOX TEMPERATURE ..... 48

ELECTRICAL CONNECTION:
DO'S AND DONT'S ..... 49

## APPLICATIONS ..... 50

HEAT TREATMENT ..... 51

STEEL INDUSTRY ..... 52

ALUMINUM INDUSTRY ..... 54

THERMAL ENERGY STORAGE AND
FLUIDIZED BED SYSTEMS ..... 55

REGENERATIVE THERMAL OXIDIZERS (RTO) ..... 56

LADLE HEATERS AND OTHER
PREHEATING SOLUTIONS ..... 57

# INTRODUCTION TO TUBOTHAL®

**Performance, reliability, and efficiency are non-negotiable in demanding industrial heating and electrification ecosystems. As industries strive for higher process temperatures, greater energy savings, and reduced maintenance, the need for safer, quieter, and cleaner operations becomes equally crucial. This is where Kanthal's Tubothal® excels, while traditional heating technologies struggle to keep up.**

# TUBOTHAL® CARTRIDGE HEATING ELEMENTS

Tubothal® is a high-performance cartridge heating element developed for industrial applications operating at typical furnace temperatures around 1,100°C (2,012°F). It is typically used with a radiant tube and can directly replace gas burners as a retrofit solution, delivering equivalent power density with the added benefits of electric heating.

Drawing on Kanthal's materials expertise and deep experience in electric heating, Tubothal® is engineered to perform reliably under even the most challenging conditions. It is ideally suited for steel and aluminum processing, heat treatment, and other furnace-based operations. With its high-power output, long service life, and zero maintenance requirements, Tubothal® defines a new standard for industrial heating.

# KEY FEATURES

• **Kanthal grade heating wire:** market leading Kanthal®-grade metallic wire, including Kanthal® APM, Kanthal® AF, Nikrothal® 80 and Nikrothal® 70.

• **Premium ceramic:** premium quality and high-performance ceramic components.

• **Smart design:** a compact and efficient design with robust features and optimal layout.

• **Customizability:** available in a broad range of sizes and configurations, with the possibility to further tailor the design for special needs.

• **Matching tube solution:** Kanthal®-grade metallic tubes (Kanthal® APM, Kanthal® APMT, Kanthal® AF) are also available in a wide range of sizes to match all sizes of Tubothal® heating elements.

# KEY ADVANTAGES

## SUPERIOR POWER AND COMPACTNESS

The high loading capabilities of Kanthal materials enable Tubothal® elements to deliver far higher power without compromising element life or overall size. At a power density of up to 45 kW/m of the element's hot zone length, a single Tubothal® unit can replace up to three conventional cartridge heaters, matching the net power of gas burners.

This leads to significant savings and allows for an easier conversion from gas burners to electric heating without increasing the footprint.

## EXTENDED SERVICE LIFE

Thanks to the superior oxidation resistance and high-temperature strength of Kanthal materials, combined with smart design features, Tubothal® operates with exceptional stability over time, with very low aging and deformation.

Its long service life reduces the frequency of end-of-life replacements and operational interruptions.

## ALMOST MAINTENANCE-FREE AND HOT REPLACEMENT

With little oxide spallation from Kanthal® FeCrAl materials, and when correctly designed with Kanthal® APM or Kanthal® APMT radiant tubes, there will be no need to clean dust deposits or rotate the tubes within the element's lifespan. Unlike most cartridge heaters that are sensitive to thermal shock, the Tubothal® heating elements can be replaced without shutting down the furnace in most cases. However, the replacement should still be well planned and executed with caution.

This means less maintenance costs, less downtime, and less risk of damaging components before the end of the element's lifespan.

# QUICK PRODUCT SPECIFICATION SHEET

| CATEGORY | SPECIFICATION |
|---|---|
| **Standard Ceramic Disc Diameters** | 68 mm, 80 mm, 110 mm, 124 mm, 154 mm, 170 mm |
| **Recommended Radiant Tube ID** | Ceramic disc diameter approx. + 10 mm (e.g., 80 mm disc → 90 mm tube ID) |
| **Max. Hot Zone Length** | 6,000 mm |
| **Typical Cold Zone Length** | ~200 mm (flexible based on design) |
| **Recommended Min. Terminal Protrusion** | 100 mm |
| **Element Materials** | **Standard:** Kanthal® APM<br>**Alternatives:** Kanthal® AF, Nikrothal® 80/70 |
| **Recommended Max. Element Temp. (Kanthal® APM)** | 1,250 °C (2,282°F) |
| **Max. Achievable Element Surface Load With Radiant Tubes**<br><br>**(Kanthal® APM With Thyristor)** | 6.0 W/cm² at 800 °C (1,470°F) furnace temperature<br><br>5.1 W/cm² at 900 °C (1,650°F) furnace temperature<br><br>4.3 W/cm² at 1,000 °C (1,830°F) furnace temperature<br><br>3.4 W/cm² at 1,100 °C (2,010°F) furnace temperature |
| **Max. Achievable Element Surface Load without Radiant Tubes**<br><br>**(Kanthal® APM With Thyristor)** | 10.7 W/cm² at 800 °C (1,470°F) furnace temperature<br><br>9.2 W/cm² at 900 °C (1,650°F) furnace temperature<br><br>7.3 W/cm² at 1,000 °C (1,830°F) furnace temperature<br><br>4.9 W/cm² at 1,100 °C (2,010°F) furnace temperature |
| **Suitable Atmosphere**<br><br>**(Kanthal® APM Without Radiant Tubes)** | Air, Ar, N2 (dew point ≥ -40°C (-40°F)) and H2<br>**Use tubes for:** Metallic dust and splash, $NH_3$, Cl, alkalis, Water Vapor, Endothermic and Exothermic gases |
| **Cold Zone Insulation** | **Standard:** Alumina silicate fiber (rated to 1,260 °C (2,300°F))<br>**Alternative:** Solid ceramic |

# ELECTRIFICATION WITH TUBOTHAL®

The increasing demand to switch from gas-fired heating to electrical heating is driven by targets to reduce $CO_2$ emissions, increase energy efficiency, and improve process control and cleanliness. Kanthal Tubothal® system offers a proven pathway to achieve these benefits, with designs optimized for both new installations and retrofit conversions.

Here are some key reasons for choosing Tubothal® for electrification:

## IMPACT ON OPERATIONAL EXCELLENCE AND QUALITY

Enhances heating performance, precision, and system reliability.

• Achieves exceptionally high thermal efficiency over 95%, compared to approximately 30-75% for gas systems.
• Provides precise temperature control (± 2–5°C) and uniform heat distribution, minimizing hot spots and improving product quality.
• Stable electrical resistance ensures consistent performance and minimal ageing of the heating elements.
• The combined use of Tubothal® and Kanthal® APM or Kanthal® APMT tubes, eliminates the risk of surface scaling and prevents product contamination.
• Easy integration into existing power supply infrastructure.

## IMPACT ON COST

Simplifies integration and reduces the total cost of ownership.

• **(CAPEX)** Tubothal® systems can be designed to match existing burner port diameters and mounting depths, reducing refractory work.
• **(CAPEX)** Adapts easily to various site voltages and existing electrical infrastructure, providing maximum design flexibility.
• **(OPEX)** Eliminates burner nozzle cleaning, combustion tuning, and reduces refractory wear, extending maintenance intervals.
• **(OPEX)** Extended service life further lowers lifecycle costs; when combined with Kanthal® APM and Kanthal® APMT tubes, it offers even longer operational life and reduced maintenance requirements.

## IMPACT ON SAFETY AND WORKPLACE ENVIRONMENT

Improves safety and working conditions for operators.

• Creates a cleaner, quieter, and safer workspace, with no combustion noise and reduced fire or explosion risk.
• The removal of combustion air blowers, gas piping, and exhaust systems simplifies the setup and frees valuable space.

Whether upgrading an existing furnace or designing a new installation, Tubothal® is a future-ready solution built to meet the highest standards of industrial heating. The following chapters will cover the element's design, performance features, material options, typical applications, and practical guidelines for installation and maintenance.

Tubothal® isn't just a heating element; it's the smartest way to run your furnace.

# TECHNICAL DATA

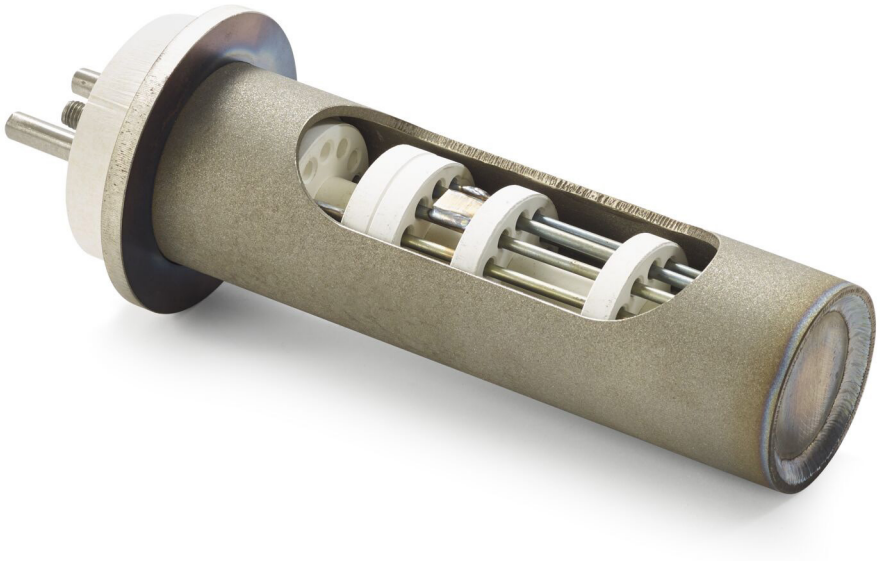

This chapter outlines the key technical parameters of Tubothal® heating elements. It covers design zones, geometry, material selection, power ranges, and operational limits. The information is intended to guide proper specification, integration, and safe use of the elements in industrial furnace environments.

# FUNCTIONAL ZONES AND GEOMETRY DEFINITIONS

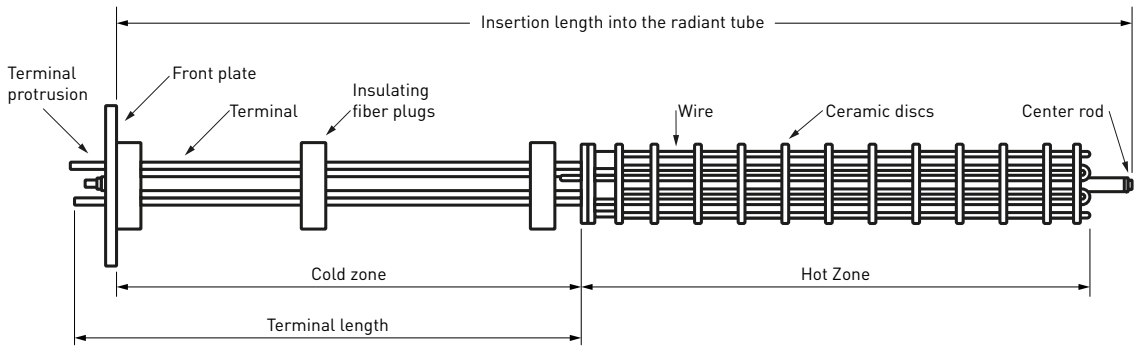


Each Tubothal® element is divided into:
• Hot zone – the heated portion.
• Cold zone – the passage through furnace wall with optimized thermal insulation.
• Terminal protrusion – part of the element extending outside the front plate.

Each zone is customized and balanced for individual designs to optimize performance.

# STANDARD ELEMENT DIAMETERS AND ZONE MEASUREMENTS

Tubothal® elements are manufactured in several sizes adapted to ceramic discs and radiant tubes in our portfolio.

## ELEMENT DIAMETERS

**STANDARD CERAMIC DISC DIAMETERS:**
68 mm, 80 mm, 110 mm, 124 mm, 154 mm, 170 mm.

**RECOMMENDED RADIANT TUBE INNER DIAMETER:**
Select a tube inner diameter that is approximately 10 mm larger than the ceramic disc diameter to ensure proper clearance and ease of installation.

(e.g., for an 80 mm disc, a 90 mm tube ID is recommended).

Placing the element inside a tube raises its operating temperature compared to a freely radiating element. Size the front plate according to the tube diameter so the tube ID is fully covered.

**Note:** The purpose of the front plate is to control the insertion depth of the element into the furnace or radiant tube, and to ensure the correct position and alignment of the terminals.

## ZONE MEASUREMENTS

**MAXIMUM STANDARD HOT ZONE LENGTH:**
6,000 mm.

**TERMINAL PROTRUSION:**
100 mm.

Sufficient space must be allowed outside the furnace for electrical connections.

**COLD ZONE LENGTH:**
The cold zone length is functionally fixed, but its design can be adapted to suit the application. In most cases, a length of approximately 200 mm is required to allow safe terminal placement and effective insulation.

Design the cold zone to align with the furnace wall, ensuring that the hot zone is positioned entirely within the furnace chamber.

# ELEMENT MATERIALS

Tubothal® elements are offered with heating wires from the following material grades:

## STANDARD GRADES:

**Kanthal® APM** – Powder-metallurgical material with excellent high-temperature strength and oxidation resistance (alumina protective layer). 15% lower density than NiCr alloys. The maximum recommended element temperature is 1,250°C (2,282 °F), delivering higher power density.

## ALTERNATIVE GRADES:

**Kanthal® AF** – A cost-effective alternative to Kanthal® APM with good high temperature strength but still excellent oxidation resistance (alumina protective layer). 15% lower density than NiCr alloys. The maximum recommended element temperature is 1,150 °C (2,102 °F).

**Nikrothal® 80** – Suitable for moderate element temperature. Good resistance against a reducing atmosphere. The maximum element temperature is 1,100 °C (2,012 °F)

**Nikrothal® 70** – Suitable for moderate element temperature. Good resistance against a reducing atmosphere. Slightly higher strength than Nikrothal® 80. The maximum element temperature is 1,100 °C (2,012 °F).

All material data sheets are available on kanthal.com

# POWER LIMIT AND VOLTAGE RANGE

When considering the maximum voltage for Tubothal® elements, it is advisable to adhere to the Low Voltage Directive (LVD). This directive specifies voltage limits ranging from 50 to 1,000 V for alternating current and 75 to 1,500 V for direct current.

When specifying voltage and power requirements, it is important to ensure the resistance and current values are matched to the supply and control system.

Once voltage and resistance are aligned with the supply and control system, the next step is to identify how much power each element diameter can safely deliver at different furnace temperatures.

**MAXIMUM DESIGN POWER OUTPUTS FOR ALL STANDARD ELEMENT DIAMETERS AT DIFFERENT FURNACE TEMPERATURES (USING KANTHAL® APM WIRE WITH A RADIANT TUBE)**

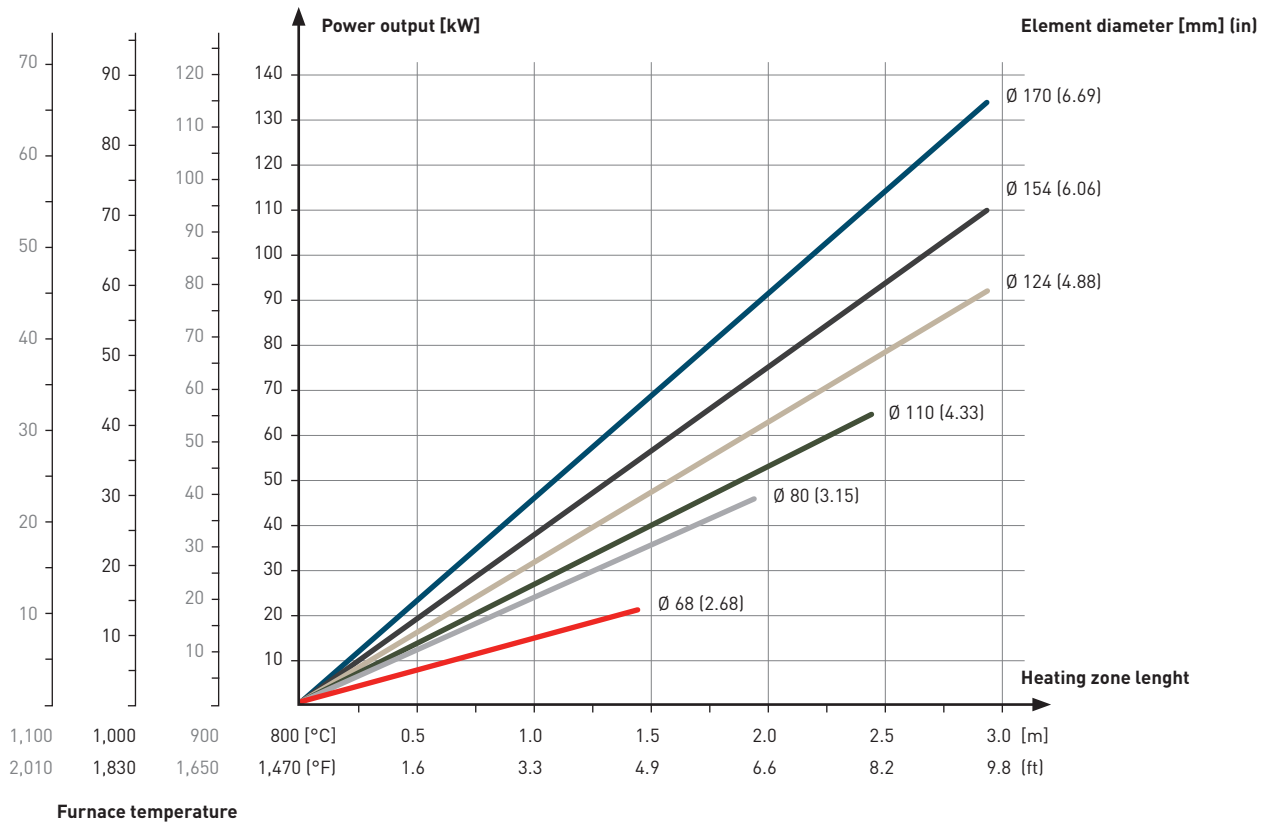

# SURFACE LOADING AND TEMPERATURE LIMITS

## MAXIMUM ELEMENT SURFACE LOAD (KANTHAL® APM):

Surface loading must be adapted to furnace temperature and atmosphere. As a reference:

• 6 W/cm² can typically be achieved at 800 °C (1,472°F), under favorable conditions.

• At higher temperatures, surface load must be reduced to maintain safe operating margins and element life.

## MAXIMUM ELEMENT TEMPERATURE (KANTHAL® APM):

1,250 °C (2,282°F) under appropriate furnace conditions.

Surface load calculations should always consider oxidizing/reducing atmosphere, ramp rates, and expected lifetime.

# FURNACE ATMOSPHERE CONSIDERATIONS

Tubothal® elements function effectively in air and various industrial atmospheres. Conditions with positive dew points are advantageous.

## CHALLENGING ATMOSPHERES (FOR KANTHAL® APM) INCLUDE:

- Nitrogen-rich dry atmospheres, including ammonia and cracked ammonia (recommended min. dew point is -40°C (-40 °F))
- Chlorine and fluorine vapors
- Alkali-bearing atmospheres

These environments degrade the protective oxide layer on the element's surface, especially during cycling or where mechanical contact or abrasion occurs.

It is common, and often a must, to use radiant tubes to protect Tubothal® elements from furnace atmospheres. The maximum recommended radiant tube temperature under different atmospheres is shown in the graph below:

### MAXIMUM RECOMMENDED TEMPERATURE IN VARIOUS ATMOSPHERES

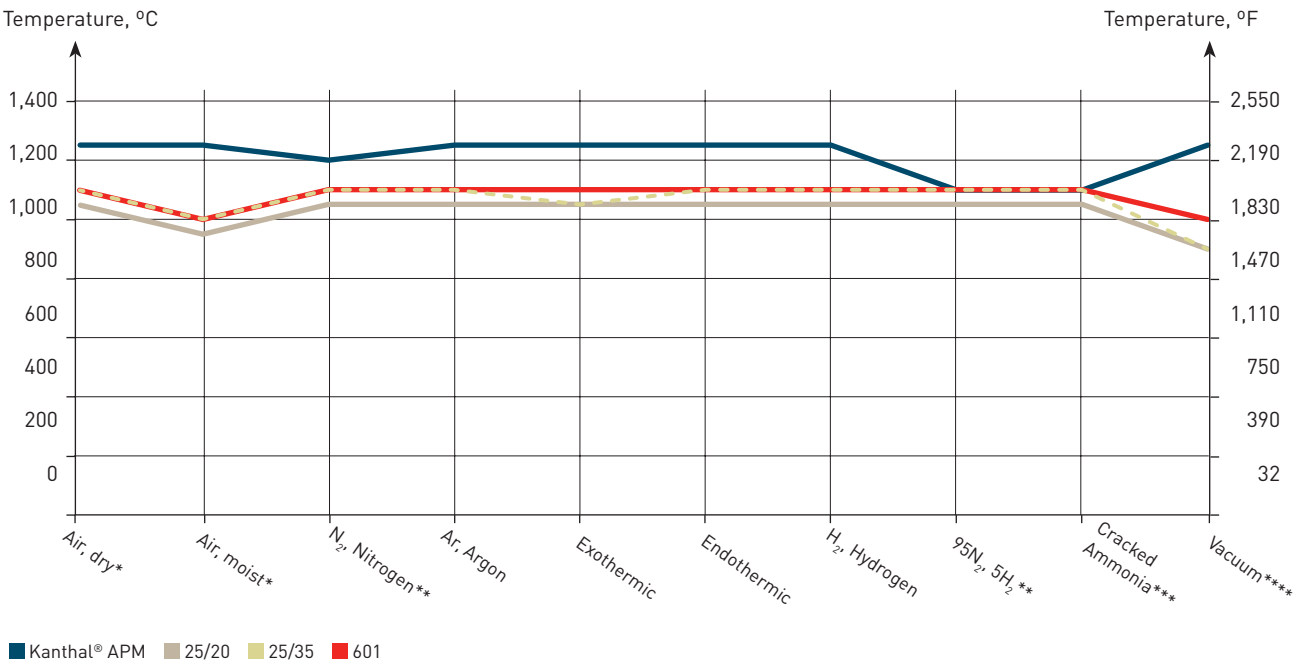


* Limitation due to mechanical strength. The material can withstand temperatures up to 1,425°C (2,600°F)
** Temperature limitation depending on dew point
*** An atmosphere created by cracked ammonia, that may contain uncracked ammonia, will lower the max. recommended temperature. Other materials designed for this atmosphere can be provided upon request
**** To utilize this temperature, Kanthal® APM and Kanthal® APMT alloys should be reoxidized at certain intervals

# COLD ZONE INSULATION

The standard cold-zone insulation consists of alumina silicate fiber, rated to 1,260°C (2,300°F). This solution is compact, effective, and easy to install.

Alternative insulation options include solid ceramic grades, which may be preferred in mechanically exposed areas or where fiber use is restricted.

Designs must be adapted to allow:
- Center rod clearance
- Terminal connections
- Thermocouple access or pass-throughs

All cold-zone sections must be sufficiently insulated to prevent heat conduction to terminal boxes and external wiring.

# RADIANT TUBES

Radiant tubes are commonly used together with Tubothal® elements for support and protection. Kanthal offers several tube grades and sizes to best match and provide optimal radiant heating solutions.

**Kanthal® APMT:** Strong Powder-Metallurgical tubes with the best sagging resistance and excellent high temperature corrosion resistance. Suitable for the most demanding furnace conditions, such as long unsupported length (typically >2m), high furnace temperature (typically >1,000°C (1,832 °F)).

**Kanthal® APM:** Strong Powder-Metallurgical tubes with excellent sagging resistance and excellent high temperature corrosion resistance. Suitable for most applications.

**Kanthal® AF:** Strip-welded tubes with excellent high-temperature corrosion resistance but limited strength. A cost-effective solution for vertical installations with less thermal and mechanical stress.

**Sanicro® 70:** High nickel-based tubes with good strength and corrosion resistance, suitable for furnaces with fluxes and metal splash.

### KANTHAL® APM/APMT TUBE STOCK PROGRAM

| OD | | WALL THICKNESS | | WEIGHT KANTHAL® APM | | WEIGHT KANTHAL® APMT | | MAX. LENGTH | | STANDARD STOCK | |
|---|---|---|---|---|---|---|---|---|---|---|---|
| MM | IN | MM | IN | KG/M | LB/FT | KG/M | LB/FT | M | FT | KANTHAL® APM | KANTHAL® APMT* |
| 26.67 | 1.05 | 2.87 | 0.11 | 1.52 | 1.02 | 1.55 | 1.04 | 13.0 | 42.6 | • | • |
| 33.4 | 1.31 | 3.38 | 0.13 | 2.26 | 1.52 | 2.30 | 1.55 | 13.0 | 42.6 | • | • |
| 33.7 | 1.33 | 6.0 | 0.24 | 3.71 | 2.49 | 3.76 | 2.53 | 10.5 | 34.4 | | • |
| 40 | 1.57 | 3.0 | 0.12 | 2.48 | 1.67 | | | 13.0 | 42.6 | • | |
| 50.8 | 2.00 | 6.35 | 0.25 | 6.30 | 4.23 | | | 7.0 | 23.0 | • | |
| 60.33 | 2.38 | 3.91 | 0.15 | 4.92 | 3.31 | | | 8.0 | 26.2 | • | |
| 64 | 2.52 | 4.0 | 0.16 | 5.35 | 3.60 | | | 7.0 | 23.0 | • | |
| 75 | 2.95 | 4.5 | 0.18 | 7.08 | 4.76 | 7.19 | 4.83 | 12.0 | 39.4 | • | • |
| 83 | 3.27 | 5.0 | 0.20 | 8.70 | 5.85 | 8.83 | 5.93 | 12.0 | 39.4 | • | • |
| 89 | 3.50 | 5.5 | 0.22 | 10.2 | 6.85 | 10.4 | 6.99 | 12.0 | 39.4 | • | • |
| 100 | 3.94 | 5.0 | 0.20 | 10.6 | 7.12 | 10.8 | 7.26 | 11.5 | 37.7 | • | • |
| 109 | 4.29 | 5.0 | 0.20 | 11.6 | 7.79 | | | 10.0 | 32.8 | • | |
| 115 | 4.53 | 5.5 | 0.22 | 13.4 | 9.00 | 13.6 | 9.14 | 8.0 | 26.2 | • | • |
| 128 | 5.04 | 5.5 | 0.22 | 15.0 | 10.08 | | | 12.0 | 39.4 | • | |
| 146 | 5.75 | 6.0 | 0.24 | 18.7 | 12.57 | 19.0 | 12.77 | 9.5 | 31.2 | • | • |
| 154 | 6.06 | 6.0 | 0.24 | 19.8 | 13.30 | | | 8.0 | 26.2 | • | |
| 164 | 6.46 | 6.0 | 0.24 | 21.2 | 14.25 | | | 7.0 | 23.0 | • | |
| 178 | 7.01 | 8.0 | 0.31 | 30.3 | 20.36 | | | 8.0 | 26.2 | • | |
| 198 | 7.80 | 9.0 | 0.35 | 37.9 | 25.47 | 38.5 | 25.87 | 5.0 | 16.4 | • | • |
| 260 | 10.24 | 11.0 | 0.43 | 61.1 | 41.06 | | | 3.0 | 9.8 | • | |

* Tubes in Kanthal® APMT are also available in all sizes. Please contact Kanthal for special requests.

## TOLERANCES

**TUBES ≤OD 50 MM**
**OD**
± 1.5%, min ± 0.75 mm (0.030 in)

**Wall thickness**
± 15%, min ± 0.6 mm (0.024 in)

**Straightness**
Max height of arc 3 mm/1000 mm (0.12 in/39.4 in)

**TUBES >OD 50 MM**
**OD**
± 1%

**Wall thickness**
± 15%

**Straightness**
Max height of arc 3 mm/1000 mm (0.12 in/39.4 in)

For details, please refer to Chapter 3 and Chapter 5.

# STANDARD DESIGN GUIDELINES

**Tubothal® elements are engineered for versatility across a wide range of industrial furnace types and installation configurations. This chapter outlines standard design practices, parameters, and recommendations for optimal performance and longevity. The goal is to provide a structured framework for designing reliable Tubothal® heating systems adapted to specific furnace applications.**

# DESIGN PARAMETERS AND CONSIDERATIONS

Designing a robust Tubothal® heating system begins with collecting the right technical parameters. The checklist below outlines the data needed to create reliable, high-performing designs adapted to specific applications. It also covers important dimensional standards, material options, and the effect of furnace conditions on performance,

| NO. | PARAMETER | DETAILS |
|---|---|---|
| 1 | **Power Requirement (kW)** | Total heating power needed. Influences the number, length, placement, surface load, and geometry of elements. Specify any constraints on the allowable number or size of elements. |
| 2 | **Main Voltage (V)** | Voltage available at the site. The element's resistance, current, and quantity must be designed to match this voltage.<br><br>When considering the maximum voltage for Tubothal® elements, it is also advisable to adhere to the Low Voltage Directive (LVD). This directive specifies voltage limits ranging from 50 to 1000 V for alternating current and 75 to 1500 V for direct current. |
| 3 | **Furnace Atmosphere – Known Corrosive Agents** | Specify the composition of the furnace atmosphere.<br><br>When using Kanthal® APM and AF material, the following atmosphere can severely impact the oxide layer on the element and reduce the system's life expectancy.<br><br>• Nitrogen-rich dry atmospheres, including ammonia and cracked ammonia (with dew point below -40 °C (-40 °F))<br>• Chlorine / Fluorine<br>• Alkali |
| 4 | **Other Relevant Furnace Conditions** | These include:<br>• Presence of salt or fluxes<br>• Risk of molten metal splashes<br>• Strong or turbulent gas flows<br>• Mechanical impacts<br>• Steam or water vapor |
| 5 | **Intended Operating Conditions** | Specify the expected furnace temperature ramp rates or any other thermal cycling. |
| 6 | **Control Mode** | Optimized tuning of the PID temperature controller and thyristor power control is strongly recommended for smooth operation and longevity as compared to on/off regulation.<br><br>Specify whether the power control system uses:<br>• Burst firing with recommended 1 sec cycle time or less<br>• Phase-angle (with consideration of interference)<br><br>Specify whether the temperature control system uses:<br>• Cascade or 'dual loop' PID control by means of controlling tube temperature in parallel with process temperature<br>• Zone control by means of individually located thermocouples per zone. |
| 7 | **3-Phase Connection Mode** | The elements can be connected either in a STAR, closed DELTA, or open DELTA configuration. A correct connection type ensures balanced load distribution and electrical safety. |
| 8 | **Installation Orientation** | Specify whether the element will be installed:<br>• Horizontally<br>• Vertically<br><br>Orientation affects the design of supports, the risk of sagging, and the length of unsupported zones. |

| NO. | PARAMETER | DETAILS |
|---|---|---|
| 9 | **Geometrical constraints** | Carefully consider the following dimensions and design:<br>• Hot zone length and position, typically aligning with goods to be treated and not overlapping with insulation<br>• Cold zone length and position, typically aligning element fiber insulation with the furnace wall<br>• Total element length<br>• Insertion length<br>• Mounting conditions<br> 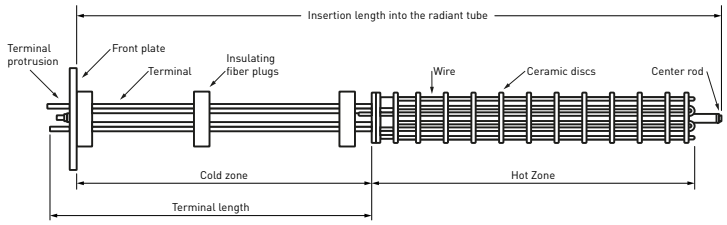 |
| 10 | **Furnace geometries** | Specify furnace chamber dimensions:<br>• Width<br>• Height<br>• Depth or inner diameter |
| 11 | **Support distance and hanging possibility** | For horizontal installations with radiant tubes, state the possible support points and the distance between the support points. If hanger supports are to be used, include a sketch or description of how they will be mounted.<br> |
| 12 | **Terminal design for electrical connection** | The standard terminal design includes grinded ends with aluminum braids.<br><br>Non-standard designs are possible but must be specified during the design phase. For details, see Chapter Tubothal® Accessories, "Electrical connectors".<br> 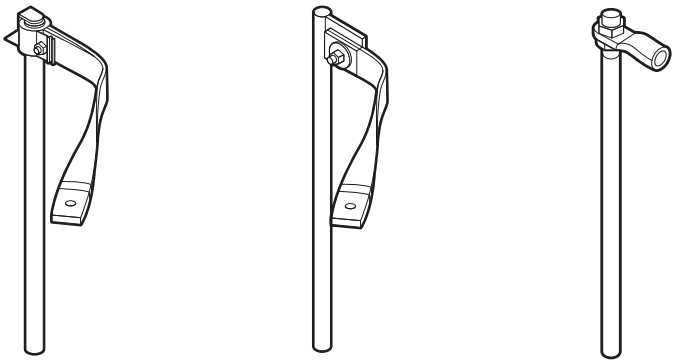 |

When designing a Tubothal® element for a specific furnace temperature, the process can begin with either the electrical parameters (power, voltage) or the geometrical parameters. Before finalizing the design, both electrical and geometrical factors must be evaluated alongside other considerations—such as the resulting element temperature, surface load, and mechanical stresses on critical parts. Finally, the design is refined by adjusting the hot zone positioning and the cold zone/insulation geometries to ensure optimal alignment with the furnace.

# HORIZONTAL DESIGN

## USE WITH TUBES

Tubothal® elements are not self-supporting in horizontal setups and must be used with radiant tubes for mechanical support and environmental protection.

Radiant tubes support heating elements, preventing sagging and shielding them from thermal shock, mechanical impacts, and harmful atmospheres. They also enable hot replacement of elements without shutting down the furnace.

To prevent overheating, adequate clearance must be maintained between adjacent radiant tubes and between tubes and furnace structures. The recommended minimum distances are:

- **Adjacent tubes:** 2.5 times the outer diameter (center-to-center)
- **Tube to wall, ceiling, floor, or goods:** 1 time the tube outer diameter (measured from the tube's outer surface)

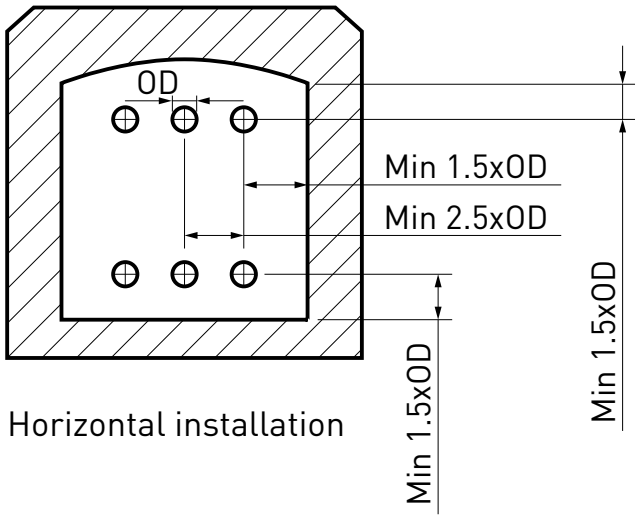


Horizontal installation

# TUBE MATERIAL SELECTION

To optimize the lifetime of Tubothal® solution with radiant tubes, or sometimes even to enable the use of such a solution, there are several important factors to consider.

| FACTOR | CONSIDERATION |
|---|---|
| **Corrosion Resistance** | Aggressive furnace atmospheres, such as oxidizing, reducing, carburizing, and nitriding gases, can cause the radiant tubes to degrade. The tube wall will be prone to thinning and pitting, which eventually can lead to cracking or rupture.<br><br>• Choose material that is best suited for the specific atmosphere. |
| **Spallation Resistance** | Spallation refers to the flaking or detachment of oxide scales formed on the inner or outer surfaces of the radiant tube during high-temperature operation. This phenomenon can lead to operational issues and product contamination.<br><br>Inner surface spallation: Oxide flakes can detach and accumulate on the heating element or tube bottom, potentially causing electrical flashover or short circuits. This is a common failure mode in radiant tube applications.<br><br>Outer surface spallation: Falling scale from the tube's exterior may contaminate the product, particularly when workpieces are directly below the tubes. This can compromise surface finish, cleanliness, or metallurgical properties.<br><br>• Choose materials that form adherent, stable oxide layers. |
| **High-Temperature Strength** | It is important to be aware that the radiant tubes not only operate under long-term exposure to high temperatures (1,000–1,300°C (1,832–2,372 °F)) but also carry the weight of the heating element. Weak tube material can lead to deformation and premature failures of the heating system.<br><br>**Creep and deformation:** Prolonged heat and stress cause tubes to sag or bend, which can misalign and eventually damage the element inside. The risk of failure significantly increases with:<br>1. Longer unsupported tube span, e.g., longer than 2m<br>2. Higher tube temperature, e.g., higher than 1,000°C (1,832 °F)<br><br>**Thermal cycling fatigue:** Repeated expansion and contraction from start/stop cycles can cause cracks or weld joint failures.<br><br>• Use materials with strong high-temperature creep and fatigue resistance to maintain tube shape and mechanical integrity<br><br>• The recommended maximum tube sagging is 20 mm before having difficulties in replacing elements (the distance that the center of the tube lowers).<br><br> 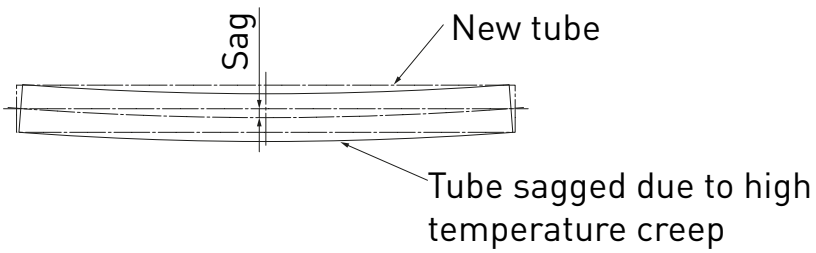 <br> |

| FACTOR | CONSIDERATION |
|---|---|
| **Thermal Shock Resistance** | Avoids tube cracking or failure during rapid heating and cooling cycles, which are common in batch furnaces or during emergency shutdowns, as well as hot replacement of elements. |
| **Thermal Expansion Match** | Reduces mechanical stress between the heating element and the radiant tube during temperature changes. This also applies to the strength where different materials join, such as flange and bottom welding. |

For optimal performance in Tubothal® heating systems, Kanthal® APM and Kanthal® APMT radiant tubes are the preferred choices. These powder metallurgical iron-chromium-aluminum (FeCrAl) alloys are specifically engineered to operate in conjunction with Tubothal® elements, offering a highly efficient, stable, and robust heating solution.

**KEY ADVANTAGES INCLUDE:**

- **Outstanding high-temperature corrosion resistance** against Air, Water vapor, Ar, N2 (dew point ≥ -40°C (-40 °F)), H2, Endothermic and Exothermic gases
- **Excellent mechanical strength,** enabling extended tube spans with minimal sagging or deformation, especially at elevated temperatures compared to NiCr tubes
- **Stable aluminum oxide surface** ensuring almost no spallation, exponentially reducing maintenance effort compared to NiCr tubes with chromium oxide spallation
- **Thermal expansion compatibility** with Kanthal® element wire, minimizing mechanical stress and reducing the risk of cracking or fatigue during thermal cycling

In environments with fluxes, such as aluminum melting or holding furnaces, Kanthal also provides Sanicro® 70 radiant tubes. This high-nickel alloy offers superior resistance to flux-induced corrosion and is well-suited for chemically aggressive conditions.

## TUBE SUPPORT METHODS

To enable longer tube lengths while avoiding sagging or loss of shape, tube supports can be added to reduce unsupported spans.

This prevents tube bending or deformation, thereby enhancing both the performance and longevity of the tube and the element.

Tube supports in horizontal installations and can be of three types:

| SUPPORT TYPE | MAIN FEATURE | DETAILS |
|---|---|---|
| By Furnace Roof | Hangers | Hanging solutions from the furnace roof are often used when the tube has a long unsupported length or cannot be wall-supported.<br><br>Kanthal offers custom-made hangers for optimal performance. See "Accessories" for details.<br><br> <br><br>See Chapter Tubothal® Accessories, "Tube Hangers" for details. |
| By the Furnace Wall | Tube End Support/ Furnace Wall Support | Furnace wall support is typically the most secure way of installation. There are several approaches to this type of support; see examples below. There are also more complex and custom designs, especially for converting a gas-fired U-bend system to an electrical system.<br><br>Kanthal also offers radiant tubes with built-in end supports.<br><br>**Tube Supported by a Shelf**<br><br> 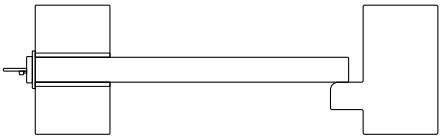 <br><br>**Tube Supported by Recess in Opposite Wall**<br><br> 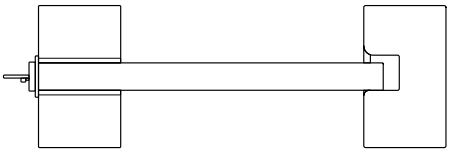 <br><br>**Tube Supported by Built-in End Support**<br><br> 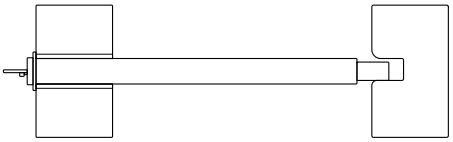 |

| SUPPORT TYPE | MAIN FEATURE | DETAILS |
|---|---|---|
| By the Furnace Floor | Furnace Floor Support | On the lower side of the furnace, bottom-type supports can also be used. This must:<br>• Be made from suitable materials<br>• Have smooth edges to avoid indentation and shearing into the tube<br>• Allow for thermal expansion/contraction of the tube<br> 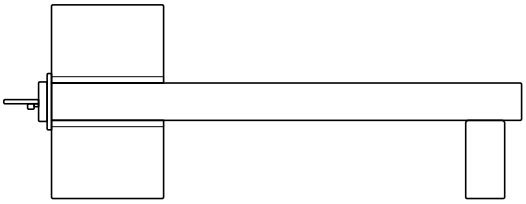 |

The selection depends on the furnace layout and available space. The design and positioning of the tube support should always be considered during the design phase.

# VERTICAL DESIGN

In vertical installations, Tubothal® elements are normally self-supporting. However, radiant tubes may still be needed in cases where protection or hot replacement capabilities are required. The standard element design for vertical installations is a hanging design. Other types of vertical designs are discussed in the next chapter.

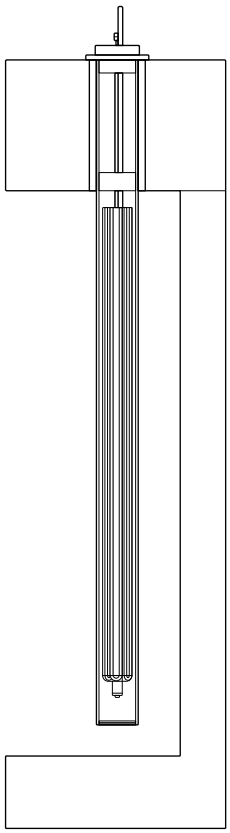

## VERTICAL HANGING ELEMENT INSIDE A HANGING TUBE

**WEIGHT SUPPORT:**
• The radiant tube is supported from the top flange and carries its weight.
• The element hangs from the front plate and is supported by the center rod.
• The center rod carries the element weight, which limits the total length and weight that can be used.

**THERMAL EXPANSION CONSIDERATIONS:**
All parts expand downward—radiant tube, element, center rod.

This results in fewer internal stresses and a straightforward expansion pattern.

For some vertical use cases where temperature gradient and fluctuation are mild, Kanthal offers Kanthal® AF radiant tubes as a cost-effective alternative. Kanthal® AF tubes are used in vertical installations where the element is suspended from the center rod. In this setup, Kanthal® AF tube protects the element from the furnace atmosphere, dust, and splashes.

However, in cases where the temperature gradient and fluctuations are significant, for example, in atmospheres with changing temperature or near furnace openings, Kanthal® APM and Kanthal® APMT tubes are recommended for better reliability due to their higher strength.

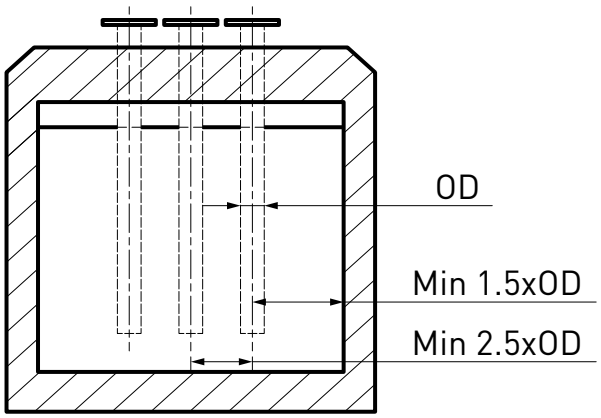

## VERTICAL HANGING ELEMENT WITHOUT A TUBE ("NAKED" ELEMENT)

In these cases, the element is suspended from the center rod, and no radiant tube is required.

This design is commonly referred to as a "naked element."

**WEIGHT SUPPORT:**
The element hangs from the front plate and is supported by the center rod.

The center rod carries the element weight, which limits the total length and weight that can be used.

**PROS:**
• Higher surface load allowed due to better heat dissipation
• Lower thermal mass enables quicker response

**CONS:**
• Higher stress from thermal cycling
• Direct exposure to furnace atmosphere (risk of dust, chemical, splash damage)

# SPECIAL DESIGNS

This chapter covers special Tubothal® design variations. Each configuration requires specific mechanical and thermal considerations.

# VERTICAL STANDING ELEMENT INSIDE A HANGING TUBE

## WEIGHT SUPPORT

• The radiant tube hangs from the top flange, supporting itself and the element.
• The element stands on the reinforced bottom of the tube, which includes a centering device.
• Ceramic tube spacers and disks carry the element weight.

This setup allows for longer, heavier elements compared to the standard hanging design.

## THERMAL EXPANSION CONSIDERATIONS

• The tube expands downward
• Center rod, ceramic spacers, and terminals expand upward
• The heating zone expands downward

Different part of the element (metal and ceramic) expand in different directions, which means the movement of one part can affect others. This increases the design complexity.

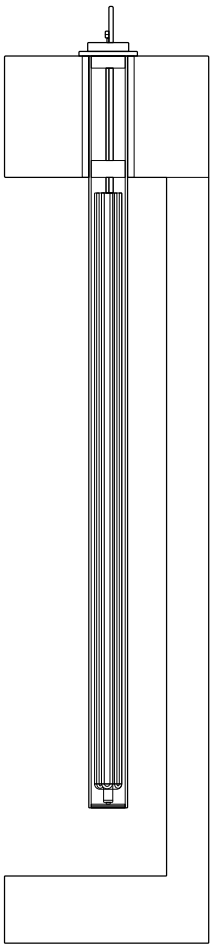

# VERTICAL STANDING ELEMENT INSIDE A STANDING TUBE

## WEIGHT SUPPORT

• The tube stands directly on a support and carries both its own and the element's weight.
• The element stands on the reinforced tube bottom, which includes a centering device.
• Ceramic tube spacers are used to support the element.

## THERMAL EXPANSION CONSIDERATIONS

• Tube, center rod, ceramic spacers, and terminals expand upward
• The heating zone expands downward

Different part of the element expand in opposite directions. Like the previous design, the movement of parts influences others and requires careful consideration.

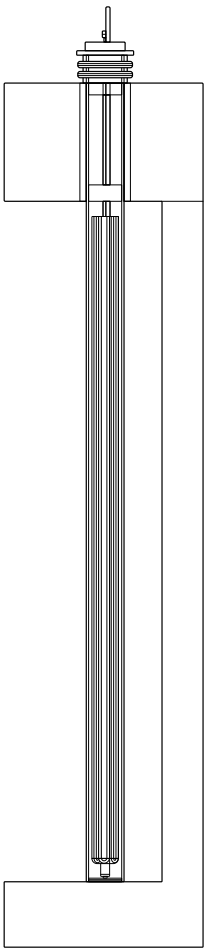

# OTHER SPECIAL DESIGNS

## UPSIDE-DOWN DESIGN

Upside-down designs, where the terminals are placed at the bottom, are uncommon and usually not recommended. They present higher risks, including:
• Load-bearing issues
• Increased chance of mechanical deformation

Special care is needed with this design.

## STATIC TILTING DESIGN

In static tilting setups, the element is mounted at an angle. Radiant tubes are needed for mechanical support.

Two common scenarios:
• If similar to vertical hanging/standing design, no special changes are needed.
• If similar to upside-down design, the same risks and considerations as upside-down setups apply.

## DYNAMIC TILTING DESIGN

In certain special cases, dynamic tilting designs are required to cope with operations that involve movement, such as:
• Furnace lids opening and closing
• Tilting ladles that shift the element's position

While similar to static tilting, this setup must account for:
• How often does movement occur
• The mechanical forces involved during movement

Radiant tubes are needed for mechanical support.

## DYNAMIC ROTATING DESIGN

In this case, the tilting axis is parallel to the tube axis, commonly used in horizontal installations.

• There will be relative movement between the element and tube (similar to how planetary gears move).
• Mechanical stress is generally lower than in dynamic tilting designs.
• In vertical installations, treat this as a tilting design and apply those considerations.

Radiant tubes offer mechanical support.

## 3-PHASE DESIGN

A 3-phase element is a highly customized case that needs special evaluation and design.

• In this setup, a single heating unit is configured to form a 3-phase system.
• Applicable for larger ceramic disc diameters, typically 124 mm, 154 mm, or 170 mm.
• Useful in installations with a limited number of elements, where electrical load balancing is needed.

# TUBOTHAL® ACCESSORIES

Tubothal® elements are supported by a range of accessories that ensure safe, stable, and long-term operation. This chapter covers recommended accessories for installation, support, electrical connection, and temperature control.

# RADIANT TUBES

Kanthal offers several radiant tube grades and sizes for different types of furnaces and applications.

Radiant tubes provide the following functionalities and advantages:
• Mechanical support to prevent element sagging
• Isolation from aggressive atmospheres and contaminants
• Protection from thermal shock and mechanical impact
• Capability for hot replacement of elements without furnace shutdown

To prevent self-radiation and overheating, adequate clearance must be maintained between adjacent radiant tubes and between tubes and furnace structures. The recommended minimum distances are:
• **Adjacent tubes:** 2.5 times the outer diameter (center-to-center)
• **Tube to wall, ceiling, floor, or goods:** 1 time the tube outer diameter (measured from the tube's outer surface)

## KANTHAL® APM AND APMT RADIANT TUBES

The best combination in electrically heated furnaces is a Tubothal® element installed inside a Kanthal® APM or Kanthal® APMT radiant tube. These tubes offer several key advantages:

Outstanding high-temperature corrosion resistance against Air, Water vapor, Ar, N2 (dew point ≥ -40°C (-40 °F)), H2, Endothermic and Exothermic gases

Excellent mechanical strength, enabling extended tube spans with minimal sagging or deformation, especially at elevated temperatures compared to NiCr tubes

Stable aluminum oxide surface ensuring almost no spallation, exponentially reducing maintenance effort compared to NiCr tubes with chromium oxide spallation

Thermal expansion compatibility with Kanthal® element wire, minimizing mechanical stress and reducing the risk of cracking or fatigue during thermal cycling

These properties contribute directly to the longer element life. Kanthal® APM or Kanthal® APMT tubes also allow operation at higher temperatures than NiCr-based alternatives. In certain applications, increasing the temperature by 100°C (212°F) can increase productivity by 30%.

The product datasheet is available on kanthal.com

## KANTHAL® AF RADIANT TUBES

For some vertical use cases where temperature gradient and fluctuation are mild, we offer Kanthal® AF radiant tubes as a cost-effective alternative. Kanthal® AF tubes are used in vertical installations where the element is suspended from the center rod. In this setup, the tube protects the element from the furnace atmosphere, dust, and splashes.

Note that in conditions with significant temperature gradients, especially near furnace openings, a mixed setup of Kanthal® AF tubes with Kanthal® APM/ Kanthal® APMT tubes is recommended for better durability.

The product datasheet is available on kanthal.com

## SANICRO® 70 RADIANT TUBES

In environments with fluxes, such as aluminum melting or holding furnaces, Kanthal also provides Sanicro® 70 radiant tubes. This high-nickel alloy offers superior resistance to flux-related corrosion and is ideal for chemically aggressive conditions that are unsuitable for FeCrAl-based tubes.

# TUBE HANGERS

In horizontal radiant tube installations, hanging solutions are often used when the tube has a long unsupported length or cannot be wall-supported. The tubes are often suspended from the roof by hangers.

Kanthal offers unique, custom designs of tube hangers to optimize the performance and lifetime of the hanging solution for horizontal radiant tube installations. These hanger designs are extremely robust and well tested with the following benefits:

- Allow unrestricted heat radiation and minimal local stress.
- Accommodate the tube's natural movements during operation.
- Long lifetime with good high-temperature strength and corrosion resistance.
- Allow easy replacement of radiant tubes.

# ELECTRICAL CONNECTORS

To avoid mechanical stress on Tubothal® terminals, caused by thermal expansion or other forces, our standard and recommended solution is the braid connector.

## BRAID CONNECTOR

The use of braids offers the following advantages:
• Cost-effective
• Simple to install
• Designed to handle thermal movement without inducing mechanical stress

We offer a standard selection of braid sizes and lengths that are matched to Tubothal® elements.

Alternative connection methods include:

## FLAG CONNECTOR

A metal strip is welded to the terminal to create a mechanical fastening point. When using this solution, it is critical to eliminate mechanical loads on the terminals by other design measures.

## THREADED CONNECTORS

These can also be used but require careful handling. During both installation and operation, no mechanical stress should be transferred to the terminals, and thermal movement of the terminals must be properly managed.

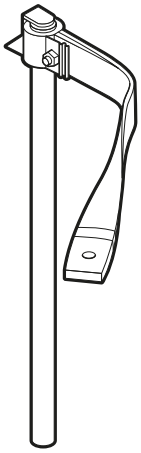

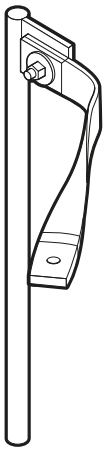

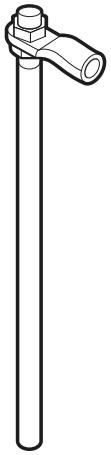

# THERMOCOUPLES

Thermocouples are Kanthal's preferred solution for temperature monitoring and control of Tubothal® elements. The advantages are:
• Cost-effective
• Mechanically robust
• Reliable
• Quick to respond

Tubothal® elements are specifically designed to be compatible with thermocouples. The recommended setup includes:
• A ceramic guide tube, which ensures accurate positioning and reduces the risk of thermocouples interfering with the electrically conductive heating wires.
• The thermocouple tip must protrude from the end of the guide tube.

For correct temperature measurements of the Tubothal® hot zone, it is sufficient to position the thermocouple tip in the 4th section between the support discs from the cold end. This provides a representative temperature measurement for the hot zone.

In horizontal installations with radiant tubes, to measure the element temperature, the thermocouple should be placed on the top side of a ceramic support disc. To measure the radiant tube temperature, the thermocouple should be placed below the element.

The typical thermocouple types are Type N, R, and S.

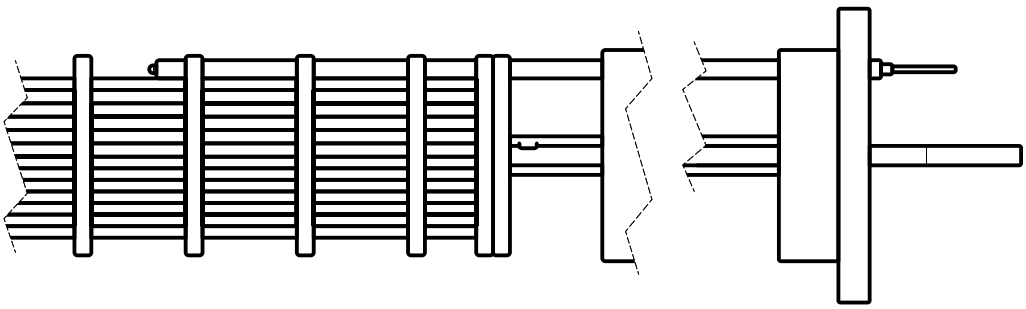

# OPERATION GUIDELINES

This chapter explains how to safely install, start up, operate, and shut down a Tubothal® system. It also includes recommendations for diagnostics and handling to help ensure long element life and trouble-free performance.

However, it is always best to consult with the furnace builder or local Kanthal salespeople for a customized and optimal process.

# INSTALLATION – ASSEMBLY AND START-UP

## ARRIVAL OF SHIPMENT

Tubothal® elements are carefully packaged to ensure safe transportation. It is strongly recommended that the elements remain in their original shipping crates until installation time. Each shipment includes detailed installation and handling instructions enclosed within the crate, which must be followed precisely. As Tubothal® elements are sensitive to improper handling, any deviation from the recommended procedures may result in damage and a significant reduction in service life.

For a more compact shipment, the front plate is unmounted and shipped together with the element in the same crate.

## DURING INSTALLATION

• Follow the installation guidelines carefully.
• Inspect the inside of the radiant tube before installation and remove any residue or foreign objects that could damage the element.
• Gently insert the element and ensure proper electrical connection.

## DURING HOT REPLACEMENT

• Inspect the inside of the radiant tube before installation and remove any residue or foreign objects that could damage the element.
• Proper insertion speed (not faster than 200 mm every 20 seconds).

## WHILE HANDLING THE ELEMENT

• Do not touch the element wire to avoid contamination.
•Lift the element by the center rod and avoid bending.
• For extra-long elements, special tools should be used to support the element.
• Avoid handling the element by the terminals to prevent mechanical damage. For example, do not lift or adjust the element using the terminals.
• Always wear clean gloves and reduce the risk of contamination.
• Make sure both terminals are approximately aligned in the horizontal plane and at positions furthest away from the tube.
• Follow the instruction documents provided with the delivery.

A custom mounting tool can be ordered separately and is recommended for easier installation of elements longer than 2 meters.

## START-UP

During a start-up, the ramp-up speed is typically limited by the furnace lining material, not the Tubothal® element. However, cycling conditions should be treated with more care – see more details in "During furnace operation" and "Shutting down or powering down".

The recommended control mode is burst firing with a maximum 1-second cycle time for best element life and performance, minimizing the disturbances in the electrical supply. Phase-angle control is generally avoided due to complications with the power supply. On/off control is not recommended.

During the first start-up, some smoke may be observed. This is normal and is caused by the burn-off of the fibre insulation binder and the paper tubes used during transport.

# DURING FURNACE OPERATION

In general:
• The recommended control mode is burst firing with a maximum 1-second cycle time. If the control system includes overtemperature protection, ensure the setting is correct. If not, the overtemperature protection can unintentionally become the main control mode.
• Smooth temperature control with small fluctuations is preferred for stable operation and longer element life.
• Forced cooling of the element can lead to thermal stress, which may damage the element and reduce its life.

For heavy cycling conditions with large temperature swings, such as in the entrance zones for charging goods:
• Use radiant tubes with good high-temperature strength as a buffer.
• Avoid completely switching off the element when the furnace door is opened. Instead, ensure that 10–20% of the element power remains active during door openings. This minimizes temperature swings on the elements and tubes, leading to longer service life.
• It is also worth considering as early as the design phase to reduce the surface loading on the wire, meaning keeping the maximum element temperature as low as possible.

Once installed and energized, it is recommended to avoid removing Tubothal® elements from the tubes before the end to avoid damaging critical components.

For the same reason, rotating installed tubes containing Tubothal® elements is not recommended. However, it may be demanded in practice and should be handled with utmost care. For more details, please refer to section "Tube rotation".

# SHUTTING DOWN OR POWERING DOWN

The thermal mass of the element affects its cooling speed and the thermal stress it experiences. In most cases, forced cooling of the furnace is acceptable. However, forced cooling of the Tubothal® element itself by directing cold air into the tube should be avoided.

When cooling down:
• Idling the furnace to save energy is possible, but it is recommended not to go below 500°C (932°F). Thermal expansion (and contraction) is not linear with temperature and is more significant below 500°C (932°F), increasing the risk of complications.

# TUBE ROTATION

The need to rotate radiant tubes arises due to tube bending over time, especially when using long tubes made from materials that lack high-temperature strength. For optimal performance and longevity of Tubothal® elements, it is strongly recommended to avoid rotating radiant tubes when used together or to minimize the need for rotation. Better alternatives include selecting stronger materials (such as Kanthal® APM and Kanthal® APMT) or using support structures to reduce unsupported length. This approach helps ensure safe, continuous operation and minimizes maintenance costs.

If a tube must be rotated, be sure to keep the following points in mind:

- It is preferred to rotate tubes 180 degrees each time and rotate back in the opposite direction the next time (alternate between clockwise and counterclockwise directions).
- It is preferred to rotate the Tubothal® element together with the tube.
- The fiber plugs and terminal positions should be designed to accommodate the foreseen rotations.

# DIAGNOSTICS

## IDENTIFYING THE FAULTY ELEMENT

The best way to monitor the condition of a Tubothal® element during operation is to measure the voltage drop while the element is energized and at high temperature. A significant deviation in voltage drops may indicate possible faulty elements.

Measuring resistance alone is not a reliable method to assess element condition. For example, when the element cools down, thermal contractions can mask problems that only occur at operating temperature.

In systems with elements connected in series, identifying the faulty one can be difficult. Often, a failed element is not the root cause of the problem.

## FACTORS THAT INFLUENCE ELEMENT LIFE

Many factors can directly or indirectly influence the lifetime of an element, for example:
**1. Thermal cycling:** Thermal cycling has negative impacts and reduces lifespan faster than continuous operation at stable temperatures.

**2. Element temperature:** Pushing element temperature over the limit can significantly reduce the element life. For example, raising the element temperature just 40°C (104°F) above the recommended limit can result in a 50% reduction of element life.

**3. Radiant tube scaling:** When using non-FeCrAl radiant tubes, such as NiCr tubes, the electrically conducting scales falling from the tubes can cause short circuits and arching, leading to element failure and even damage to the tubes.

# RISK CONSIDERATIONS

**This chapter outlines key risks in electrical and thermal management when working with Tubothal® systems. It covers creep current, terminal box temperature, and best practices for electrical connections.**

# CREEP CURRENT/ LEAKAGE CURRENT

As operational temperatures increase, the electrical insulation properties of most materials decrease. This leads to challenges related to creep current and leakage current.

A key factor behind this issue is the growing demand for higher power density, which requires higher supply voltages in electric heating systems. As these voltages increase, the risks of creep and leakage currents rise as well.

The Tubothal® element has a purely resistive load, meaning that capacitive leakage currents can be neglected. To reduce the risk of creep current, the materials used, and the element design are important factors.

However, Tubothal® heating elements are only one part of a complete installation. The key to mitigating risks from creep and leakage currents lies in system design, control, and electrical distribution. Proper system planning is essential.

# TERMINAL BOX TEMPERATURE

The recommended electrical connection is aluminum braids, linking the power supply to the Tubothal® terminals. This solution is cost-effective and offers reliable performance.

To minimize the risk of degradation of the electrical contacts, it is important to keep the terminal box temperature below 100°C (212°F). Overheating can weaken connections and reduce system reliability. Adequate ventilation or cooling of the terminal box is therefore critical. Natural air convection is recommended where possible.

# ELECTRICAL CONNECTION: DO'S AND DON'TS

When connecting power to a Tubothal® element, it is essential to ensure:
• There is a solid mechanical and electrical contact across the entire ground, polished contact area of the terminal (Oxide layers on terminals are electrically insulating and must not interfere with the connection).
• There are complete contacts to prevent hot spots and damage; this applies to all connection types.

At the same time:
• No mechanical load or torque should be applied to the terminals during installation and operation. (There is a real risk of damaging the welds between the terminals and the element.)

During operation, terminal movement can occur due to thermal expansion. This movement must not create mechanical stress on the terminals.

When properly installed, Kanthal's flexible aluminum braids absorb this movement and reduce mechanical stress.

Also:
• Ensure the wrong parts of the heater setup do not come into electrical contact or come too close. (For example: terminals and radiant tubes, or terminals/braids and the center rod)
• Ensure electrical current can arc or "jump" across small gaps if insulation is compromised.
• Avoid high temperatures near the electrical connection, as it can affect the insulation properties of connecting cables, as well as cause contact degradation. Cable routing and protection must account for this.

# APPLICATIONS

This chapter outlines typical furnace applications where Tubothal® elements are used. It also explains how furnace design and process conditions influence heating element performance and requirements.

# HEAT TREATMENT

These include carburizing, carbonitriding, and nitriding furnaces for surface hardening of steels in batch or continuous processes. Other processes include high temperature annealing, tempering, normalizing, etc. The treatments typically occur between 800–1,100°C (1,472–2,012°F) under controlled atmospheres.

## MAIN CHALLENGES

• High power demand.
• Quick heat up and short response time.
• High carbon potential creating more corrosive atmosphere.
• Thermal cycling near furnace doors causes rapid element temperature fluctuations.
• Restricted radiation zones can lead to uneven heating.
• Sensitive process temperatures demand precise and stable control.

## WHY USE TUBOTHAL® SYSTEM

• Delivers high power matching the net power of gas burners.
• Push for higher carbon potential, especially combined with Kanthal® APM and Kanthal® AF tubes (vertical installation).
• Fast response time enables precise adjustment to maintain setpoints despite door openings or load changes.
• Uniform radiant heat across the furnace reduces temperature gradients, preventing uneven carburizing or nitriding.
• Long element life results from controlled surface loading and low thermal stress.
• The system's high-temperature capability supports elevated process temperatures—raising carburizing from 950°C (1,742°F) to 1,050°C (1,922°F) can boost throughput by up to 30%.

## DESIGN CONSIDERATIONS

• Optimize zoning control to ensure temperature uniformity.
• Protect elements in high-cycling zones with appropriate shielding and gradual heating/cooling. For entrance zones, design elements with low surface loading and the power at 10-20% during door opening.
• Ensure radiant tube geometry supports even coverage and easy maintenance access.
• Select the appropriate tube material for different zones, especially in the entrance zones. Kanthal® APM radiant tubes are recommended, while less stressful zones could consider Kanthal® AF radiant tubes as a cost-effective solution.

# STEEL INDUSTRY

The common furnace applications that utilize Tubothal® solutions:
• CAL (Continuous Annealing Lines)
• CGL (Continuous Galvanizing Lines)
• Reheating Furnaces

## CAL/CGL

**CAL:** The annealing process involves heating the steel to a specified temperature for a set period, before allowing it to cool in a controlled manner. The purpose is to alter the mechanical and chemical properties of the finished steel, such as its ductility and hardness. The temperature accuracy and homogeneity will have a great impact on the products.

**CGL:** The galvanizing process involves applying a protective zinc coating to steel. This is done by immersing the steel in molten zinc and maintaining a temperature of around 460°C (860°F) so that it metallurgically bonds to the steel's surface and forms an iron-zinc alloy. When the steel returns to normal atmosphere, a protective layer develops, which prevents corrosion and rust.

### MAIN CHALLENGES

• **High power demand:** Continuous lines operate with high throughput, requiring large net power input.
• **Uniform heat distribution:** Uneven heating can lead to product defects or local tube overheating.
• **Precise temperature control:** To ensure stable operation at varying line speeds.
• **High temperature operation:** The radiant tubes may operate at up to 1,150°C (2102°F) tube temperature while carrying the weight of the heating element, demanding good high temperature strength to avoid bending over time.
• **Set furnace space:** Furnaces have set spaces to work with, typically demanding compact layouts and end-supported tube solutions.
• **Maintenance workload:** Due to the large-scale installations of heating elements and radiant tubes, maintenance demand can quickly scale up depending on the solution choices.

### WHY USE TUBOTHAL® SYSTEM

• Its high-power density enables efficient heating even in large continuous lines without increasing system footprint.
• Excellent temperature uniformity and even heat distribution with element zone controls, compared to a multi-leg burner system. Fast thermal response ensures stable temperature and accurate temperature control.
• Use with Kanthal® APM and Kanthal® APMT tubes provides the strongest support for challenging lengths and high operating temperatures.

### DESIGN CONSIDERATIONS

• Exploit the high power density advantage from Tubothal® elements to replace gas burners without scaling up the footprint.
• Pair with Kanthal® APM or Kanthal® APMT radiant tubes to ensure long service life and eliminate or minimize tube rotation.
• Proper tube selection and design to accommodate the furnace depth and temperature without risks of severe sagging.

## REHEATING FURNACES

Reheating furnaces raise steel billets, blooms, or slabs to temperatures up to 1,100–1,300°C (2,012–2,372°F) for rolling operations. They can operate in batch or continuous configurations, such as roller hearth furnaces, which are also used for annealing, stress relieving, normalizing, hardening, and preheating for hot forming.

### MAIN CHALLENGES

• High operating temperatures cause thermal stress and oxidation.
• Cyclic loading during heating and cooling increases mechanical fatigue.
• Scale formation reduces heat transfer efficiency and creates risks with arcing.

• Mechanical impact and vibration from material handling can damage elements.
• Atmosphere control may require gas-tight systems.

**WHY USE TUBOTHAL® SYSTEM**

• The Kanthal® APM/Kanthal® APMT radiant tubes protect the element from scale and oxidation at high temperature, maintaining consistent heat transfer.
• The fast thermal response enables precise zone control, improving temperature uniformity and product consistency.
• Gas-tight radiant tubes provide safe operation in controlled atmospheres, eliminating the risk of short circuits.
• Easy element replacement reduces downtime in continuous production environments.

**DESIGN CONSIDERATIONS**

• Use zoning control to manage temperature gradients between preheat and soak zones.
• Provide adequate clearance between radiant tubes and workpieces for uniform radiation.
• Ensure correct support structures for horizontal or vertical mounting.
• Select Kanthal® APM/Kanthal® APMT tubes for superior oxidation resistance and long service life.

# ALUMINUM INDUSTRY

Aluminum melting and holding furnaces maintain metal at temperatures between 650–800°C (1,202–1,472°F). They often involve tilting, charging, and discharging operations under aggressive conditions with vapor, splash, and dross accumulation.

## MAIN CHALLENGES

• Severe thermal cycling from frequent furnace movement and loading.
• Corrosive atmospheres with aluminum vapors of chlorine and fluorides, as well as dross attack.
• Deposits on radiant tubes reduce emissivity and efficiency.
• Extended heating zones complicate uniform temperature control.

## WHY USE TUBOTHAL® SYSTEM

• High power density compensates for losses due to contamination or deposition on tube surfaces.
• Stable temperature control mitigates the effects of frequent thermal cycling.
• The system's mechanically robust design withstands furnace tilting and vibration without element damage.
• Long service intervals and clean operation reduce maintenance compared to gas burners.

## DESIGN CONSIDERATIONS

• Implement precise power control to handle variable load conditions.
• Use a dual loop control regime with feedback from tube temp and furnace temp to stabilize temperature control.
• Design for safe operation during tilting, ensuring flexible cable routing and secure mounting.
• Select Sanicro® 70, which is optimized for a specific furnace environment.

# THERMAL ENERGY STORAGE AND FLUIDIZED BED SYSTEMS

Thermal energy storage systems and fluidized bed furnaces rely on efficient heat exchange between solid and gas phases. They typically operate under high energy density and cyclic temperature conditions.

## MAIN CHALLENGES

• Large temperature swings (ΔT) leading to thermal shock.
• Restricted thermal expansion without proper gas flow.
• Potential for mechanical failure during start-up if fluidization is inadequate.

## WHY USE TUBOTHAL® SYSTEM

• High surface load capacity enables compact, efficient designs for both radiation and convection heating.
• In fluidized beds, fast response elements stabilize the temperature and promote even heat distribution.
• The option for naked vertical mounting in clean conditions allows maximum heat transfer and minimal maintenance.

## DESIGN CONSIDERATIONS

• Design for gradual heating/cooling cycles to minimize thermal shock.
• Maintain continuous gas flow during ramp-up for stable fluidization.
• Allow for mechanical flexibility in supports to accommodate expansion.
• Choose naked or tube-protected elements based on the atmosphere's cleanliness.

# REGENERATIVE THERMAL OXIDIZERS (RTO)

RTO systems oxidize volatile organic compounds (VOCs) by heating process gases to the ignition point of exothermic reactions. Once the reaction sustains itself, electrical power input is reduced.

## MAIN CHALLENGES

• Temperature fluctuation during heat-up and process cycling.
• Potential corrosion or contamination from process gases.
• Terminal overheating from hot gas ingress or chimney effects.

## WHY USE TUBOTHAL® SYSTEM

• Providing fast, clean heat-up to reach ignition temperature quickly, minimizing power use.
• Offering naked or tube-protected configurations—naked for clean gas streams, tube-protected for corrosive or contaminated environments.
• Delivering stable, controllable power to match variable process conditions and avoid overshoot.

## DESIGN CONSIDERATIONS

• Use gas-tight terminal enclosures to protect electrical connections.
• Choose element configuration based on gas cleanliness and temperature stability.
• Include feedback control to reduce power automatically after the ignition point is achieved.
• Choose the right tube material based on the atmosphere composition.

# LADLE HEATERS AND OTHER PREHEATING SOLUTIONS

Ladle heaters preheat refractory-lined vessels before metal pouring. These systems experience extreme thermal shock when heaters are inserted or removed from hot environments and are exposed to splashes and mechanical impacts.

## MAIN CHALLENGES

• Thermal shock during sudden insertion or removal.
• Mechanical stress and impact from handling.
• Metal splash posing a risk of short circuit or damage.

## WHY USE TUBOTHAL® SYSTEM

• The radiant tube acts as a thermal and mechanical shield, absorbing shock and protecting the element.
• The modular element design allows quick replacement and reduces downtime.
• The system provides consistent, controlled preheating, extending refractory life and reducing energy waste.

## DESIGN CONSIDERATIONS

• Use high-strength Kanthal® APM/Kanthal® APMT tubes for mechanical and thermal resilience.
• Design for safe insertion/removal with shock mitigation measures.
• Include progressive heating control to reduce thermal stress.
• Ensure secure mounting to withstand handling vibrations.

FOR CONTACT INFORMATION PLEASE VISIT KANTHAL.COM

KANTHAL®